Product Information Packet

Model AHP-270XE

Solid State Air Conditioner
Nema-4, Cool Only, 24 VDC
With TC-4F Controller

Part #0-L0J4-4-001

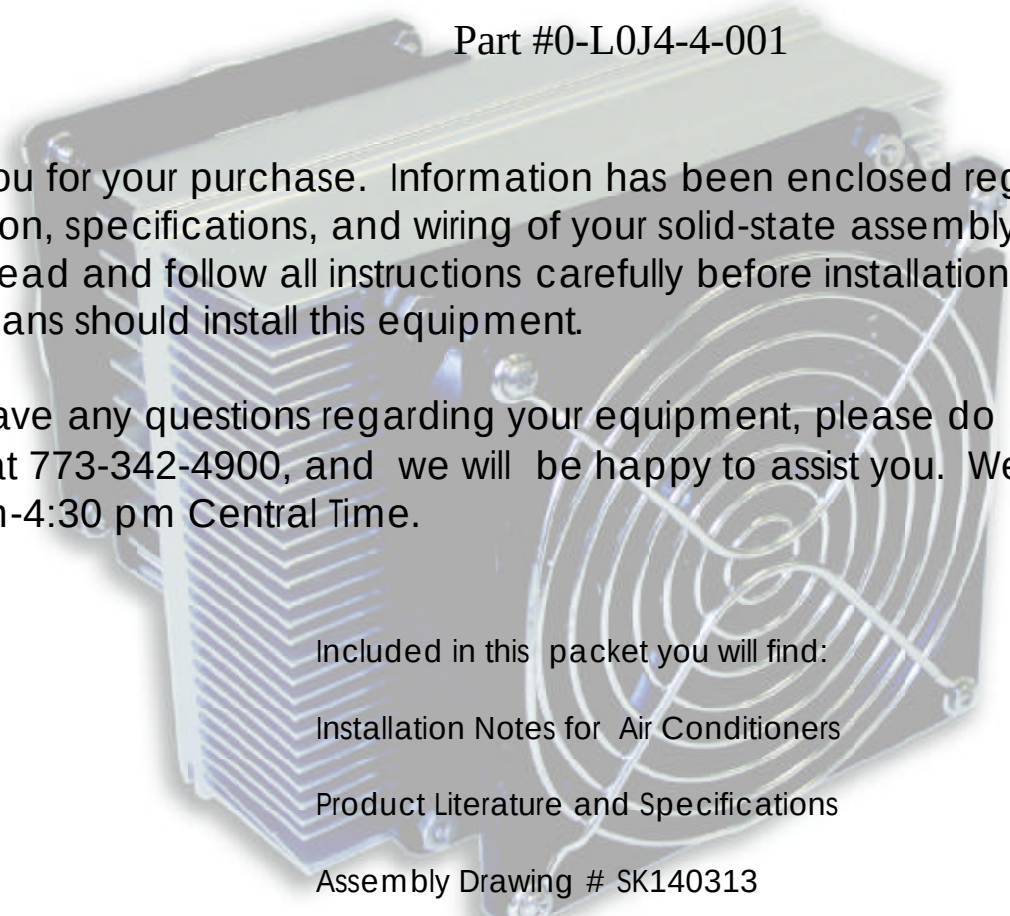

Thank you for your purchase. Information has been enclosed regarding the installation, specifications, and wiring of your solid-state assembly.
Please read and follow all instructions carefully before installation. Only qualified technicians should install this equipment.

If you have any questions regarding your equipment, please do not hesitate to call us at 773-342-4900, and we will be happy to assist you. We are open from 8:00 am-4:30 pm Central Time.

Included in this packet you will find:

Installation Notes for Air Conditioners

Product Literature and Specifications

Assembly Drawing # SK140313

Wiring Drawing # SK210707

Installation Drawing # SK140314

Warranty Information

teca
ThermoElectric Cooling America Corporation
4048 W. Schubert Avenue • Chicago, IL (U.S.A.) 60639
Ph: 773/342-4900 Fx: 773/342-0191
sales@thermoelectric.com www.thermoelectric.com

Important Installation Notes for Air

Mounting Styles: Both 'thru mount' and 'flush mount' units can be positioned in any orientation and on any enclosure surface. It is important to consider interior air flow patterns when determining the mounting location. Also of importance is an unrestricted flow of ambient air thru the hot side heat exchanger. Ease of access and inspection must be considered for those applications in particularly severe environments which may require occasional maintenance.

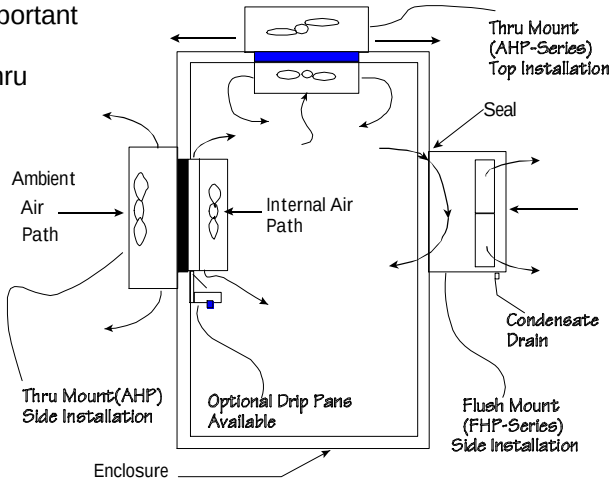

Vertical (Side/Front/Back) Mounting:

Vertical mounting refers to the vertical direction of the cold side or interior fins and is recommended for applications with high humidity, poor and incomplete cabinet seals or any condition which may cause the cold side fins to be maintained at temperatures below the dew point for long periods of time allowing for the formation of condensation. The vertical fin direction provides a drip path whereupon condensation can be collected via a moisture removal system (standard on FHP-units) or a drip pan positioned below the cold side fins. Drip pans are optional for thru mount units.

Condensate Removal System:

All FHP-Series and AHP-1400 air conditioners contain a built-in condensate removal system. The condensate kit consists of a antifungal sponge with a condensate wick. PVC tubing is also provided for drainage. Drip pans are optional for thru mount units which must be evaluated on an individual basis. Equations defining a relationship between the cold side fin and enclosure temperatures are provided to assist in the evaluation.

Top Mounting:

Though often the easiest location to mount it is often the most difficult to protect from condensation in this orientation due to the fin orientation, gravity and any susceptible components below. If a drip pan is employed by the end user use caution to place the pan far enough away from the internal fan to minimize the restriction of air flow. The pan should cover the fin ends as well as the fan area. When there is a choice, the vertical orientation is preferred by most users.

Maintenance:

Since the technology is solid-state, there are no filters, compressors, or fluorocarbons to maintain. The only moving parts are the fans. It is recommended for harsh or dirty environments that the heat sinks be cleaned from time to time. This can be accomplished by directing compressed air over the external fins or on NEMA 4 versions by hosing the unit down. This will increase the overall life and performance of the system.

Cautions:

Take care when mounting not to damage the seal between the hot and cold side sinks. Do not attempt to mount a unit to a warped surface or try to make the units mounting surface conform to an unflat surface. Do not pinch or damage any leads when mounting. Do not over tighten any installation screw, use reasonable force. Always mount with any condensate drain down. Do not compress the cold side between the hot side and any other surface. Do not obstruct the airflow on either side. When mounting consider the natural air flows of the enclosure. Connect power only after the installation is complete.

Notes on condensation:

Condensation occurs at the cold side fins when the surface temperature goes below the dew point. To reduce or remove condensate, consider the following:

- Regulate the Fin Temperature above the Dewpoint.
- Keep Enclosure Closed and Sealed from Outside Humidity.
- Use Desiccant (Moisture absorbing Granules.)
- Employ Condensate Removal System/Drip Pans.

If you have any questions regarding your installation, Please feel free to contact our technical department for assistance at 773-342-4900.

AHP-270 | Air Conditioner / Heat Exchanger

Air Cooled
Through Mounted
Nema-12, 4, 4X

12 VDC, 24 VDC
161 BTU/HR

FEATURES

- Compact (only 6" X 4.75" X 6.6")
- Mounts and operates in any orientation: horizontal, vertical, etc.
- Lower vibration and noise
- No moving parts except fans
- Environmentally safe
- No compressor, fluorocarbons or filters
- Heat via reverse polarity
- Virtually maintenance-free operation
- Weight 4.4 LBS.



POWER INPUTS

Voltage	12 VDC, 24 VDC
Current, Active	8.3 AMPS, 4.1 AMPS
Current, ECO-Mode	0.3 AMPS

PERFORMANCE RATINGS

Cooling (Traditional)	161 BTU/HR
Cooling (Din 3168)	47 WATTS
Cooling COP (at L35 L35)	0.47
Heating (Traditional)	> 334 BTU/HR
Heating (Din 3168)	> 98 WATTS
Heating COP	> 1.0

CONTROL TEMPERATURES

Active Cooling	35 °C
Heat Exchanger (ECO-Mode)	25 °C
Active Heating	10 °C
Typical Hysteresis	5 °C
Operating Ambient	-40/+70 °C
Operating Enclosure	-10/+60 °C

CONFIGURATIONS

MODEL	PART NUMBER	NOTES	INTEGRAL TEMPERATURE CONTROL	VOLTAGE VDC	CURRENT AMPS	ENVIRONMENT
AHP-270FFHC	0-L094-1-001*	Industrial fans	None	12	8.3	NEMA-12, IP 52
AHP-270FFHC	0-L095-1-001*	Industrial fans	None	24	4.1	NEMA-12, IP 52
AHP-270FF	0-L0J4-0-001	Industrial fans	TC-4F	12	8.3	NEMA-12, IP 52
AHP-270FF	0-L0J5-0-001	Industrial fans	TC-4F	24	4.1	NEMA-12, IP 52
AHP-270FFHC	0-L0I4-1-001	Industrial fans	TC-7F	12	8.3	NEMA-12, IP 52
AHP-270FFHC	0-L0I5-1-001	Industrial fans	TC-7F	24	4.1	NEMA-12, IP 52
AHP-270XEHC	0-L094-5-001*	Industrial sealed HS fan	None	12	8.3	NEMA-4, IP 56
AHP-270XEHC	0-L095-5-001*	Industrial sealed HS fan	None	24	4.1	NEMA-4, IP 56
AHP-270XE	0-L0J4-4-001	Industrial sealed HS fan	TC-4F	12	8.3	NEMA-4, IP 56
AHP-270XE	0-L0J5-4-001	Industrial sealed HS fan	TC-4F	24	4.1	NEMA-4, IP 56
AHP-270XEHC	0-L0I4-5-001	Industrial sealed HS fan	TC-7F	12	8.3	NEMA-4, IP 56
AHP-270XEHC	0-L0I5-5-001	Industrial sealed HS fan	TC-7F	24	4.1	NEMA-4, IP 56
AHP-270XHC	0-L094-3-001*	Military grade HS fan	None	12	8.3	NEMA-4X, IP 56
AHP-270XHC	0-L095-3-001*	Military grade HS fan	None	24	4.1	NEMA-4X, IP 56
AHP-270X	0-L0J4-2-001	Military grade HS fan	TC-4F	12	8.3	NEMA-4X, IP 56
AHP-270X	0-L0J5-2-001	Military grade HS fan	TC-4F	24	4.1	NEMA-4X, IP 56
AHP-270XHC	0-L0I4-3-001	Military grade HS fan	TC-7F	12	8.3	NEMA-4X, IP 56
AHP-270XHC	0-L0I5-3-001	Military grade HS fan	TC-7F	24	4.1	NEMA-4X, IP 56

* Heat/Cool function via reverse polarity capable external controller

AHP-270

MOUNTING STYLE

Through Mounted

ENVIRONMENTS SERVED

NEMA-12 IP 52

NEMA-4,4X IP 56

RATING (TRADITIONAL)

161 BTU/hr @ 0 °F ΔT

198 BTU/hr @ +20 °F ΔT

RATING (DIN 3168)

47 Watts L35 L35

35 Watts L35 L50

PERFORMANCE CURVE

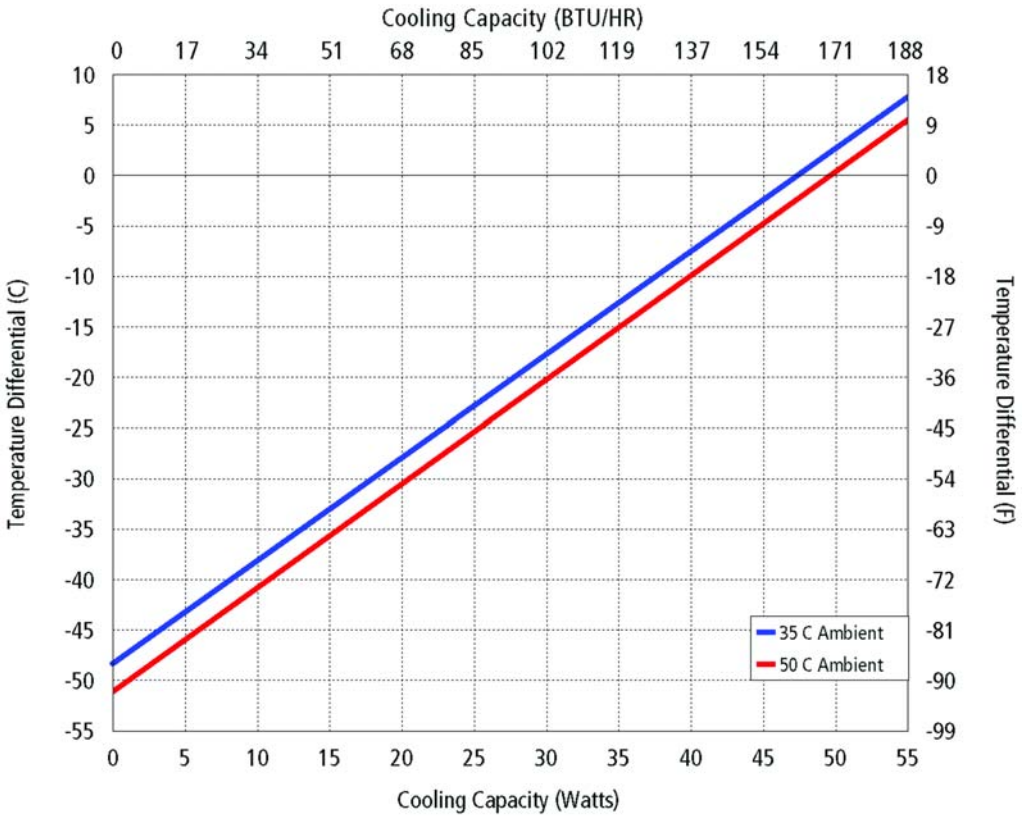

Equation of Line:	y=ΔT(°C)	x=Capacity (Watts)
Ambient Temp	**35°C**	**50°C**
Enclosure Air	y=1.02x-48.3	y=1.03x-51
Cold Sink	y=0.78x-48.3	y=0.79x-51

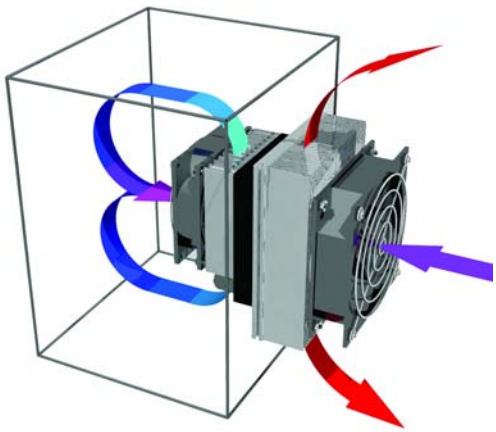

Air Flow Pattern

DIMENSIONS

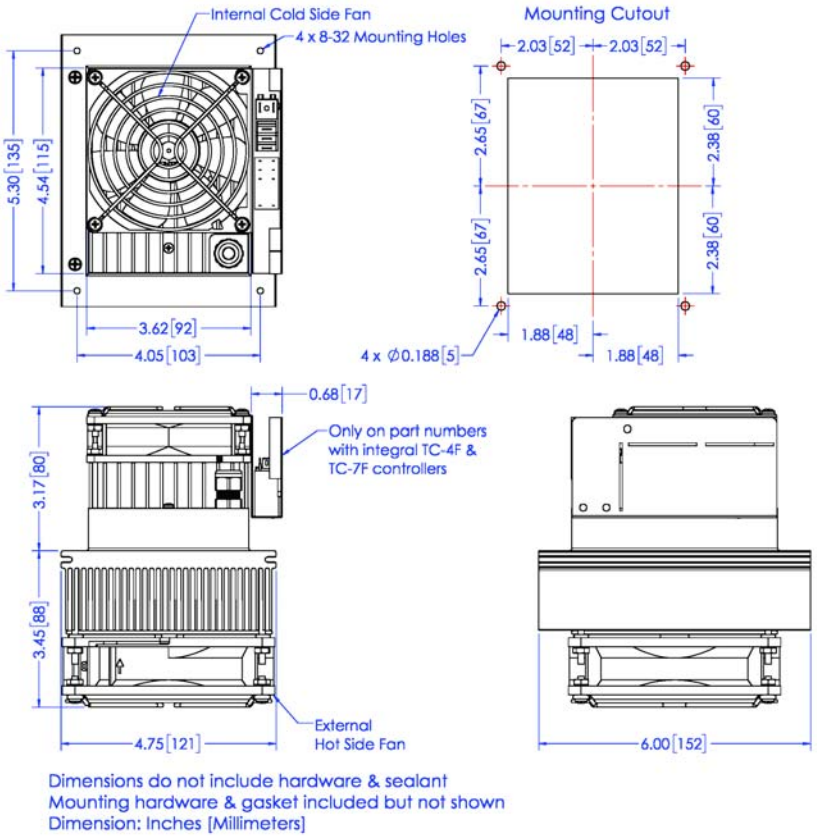

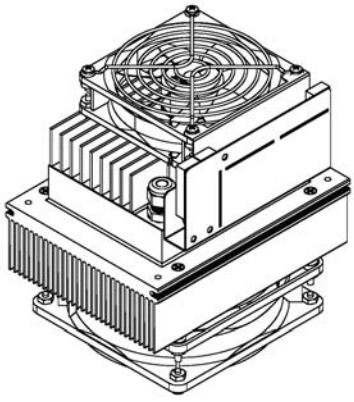

Dimensions do not include hardware & sealant
Mounting hardware & gasket included but not shown
Dimension: Inches [Millimeters]

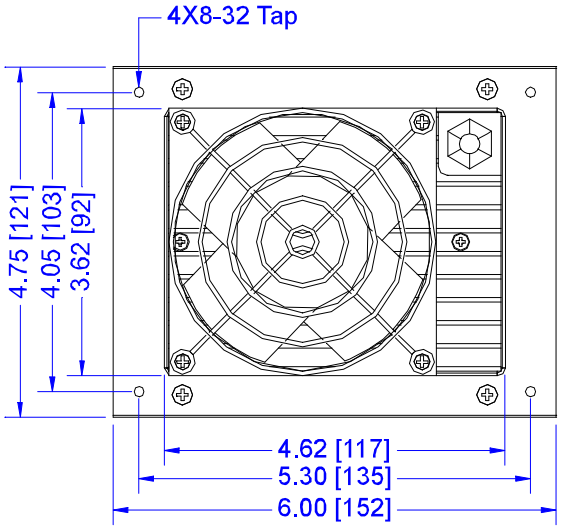

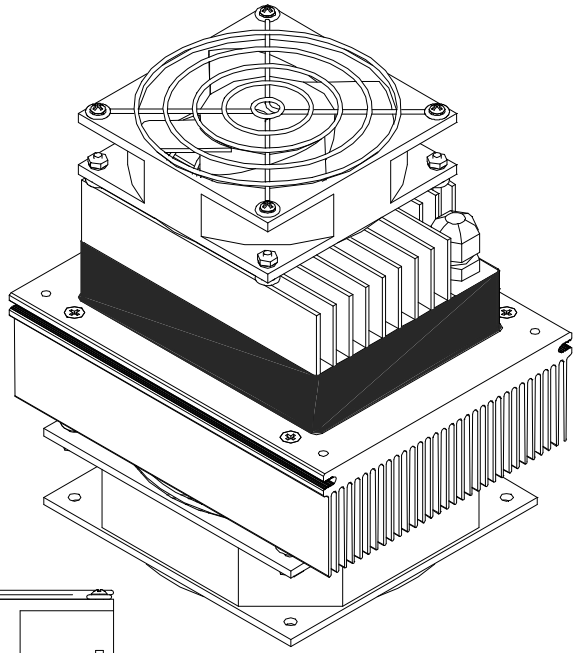

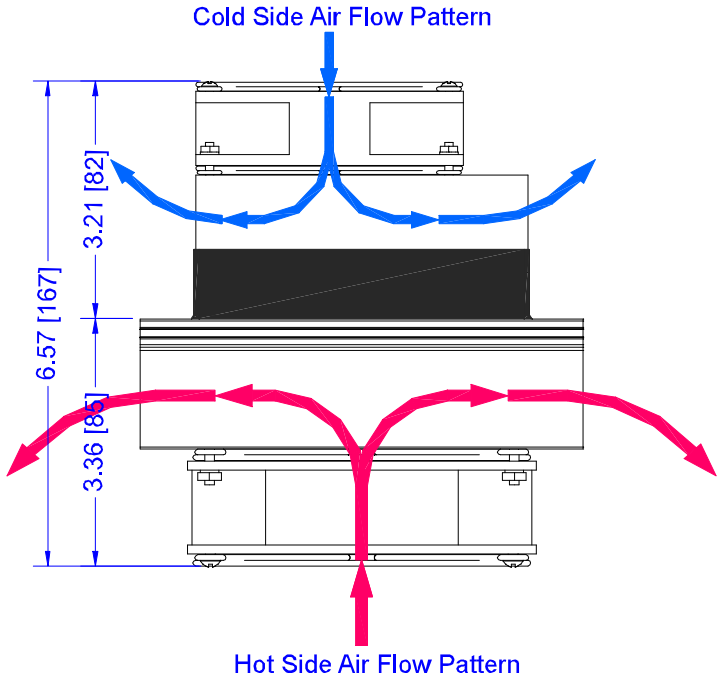

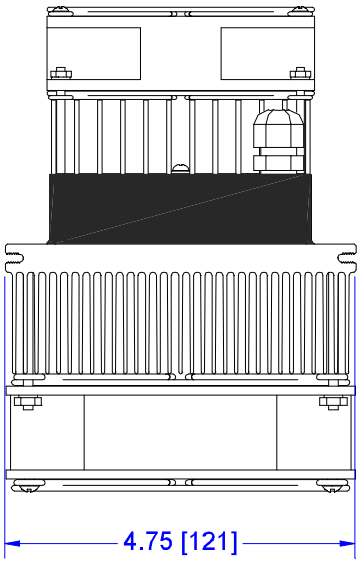

INFORMATION DISCLOSED HEREIN IS THE CONFIDENTIAL PROPERTY OF TECA CORP. RECIPIENT SHALL NOT USE THE INFORMATION IN ANY UNAUTHORIZED MANNER.

UNLESS OTHERWISE SPECIFIED
DIMENSIONS ARE IN INCHES
TOLERANCES ARE:

DECIMALS
.XX +/-
.XXX+/-

ANGLE +/-

FRACTION +/-

FINISH:

MATERIAL:

THERMOELECTRIC COOLING AMERICA CORP.

AHP-250, AHP-270 SERIES
THERMOELECTRIC AIR CONDITIONER ASSEMBLY

DRAWN BY: AA

DATE: 03/10/2014

DRAWING # SK140313

REV LEVEL

SCALE D9051

MASTER: MASTER

SHEET

REV	DESCRIPTION	Date	APPROVED

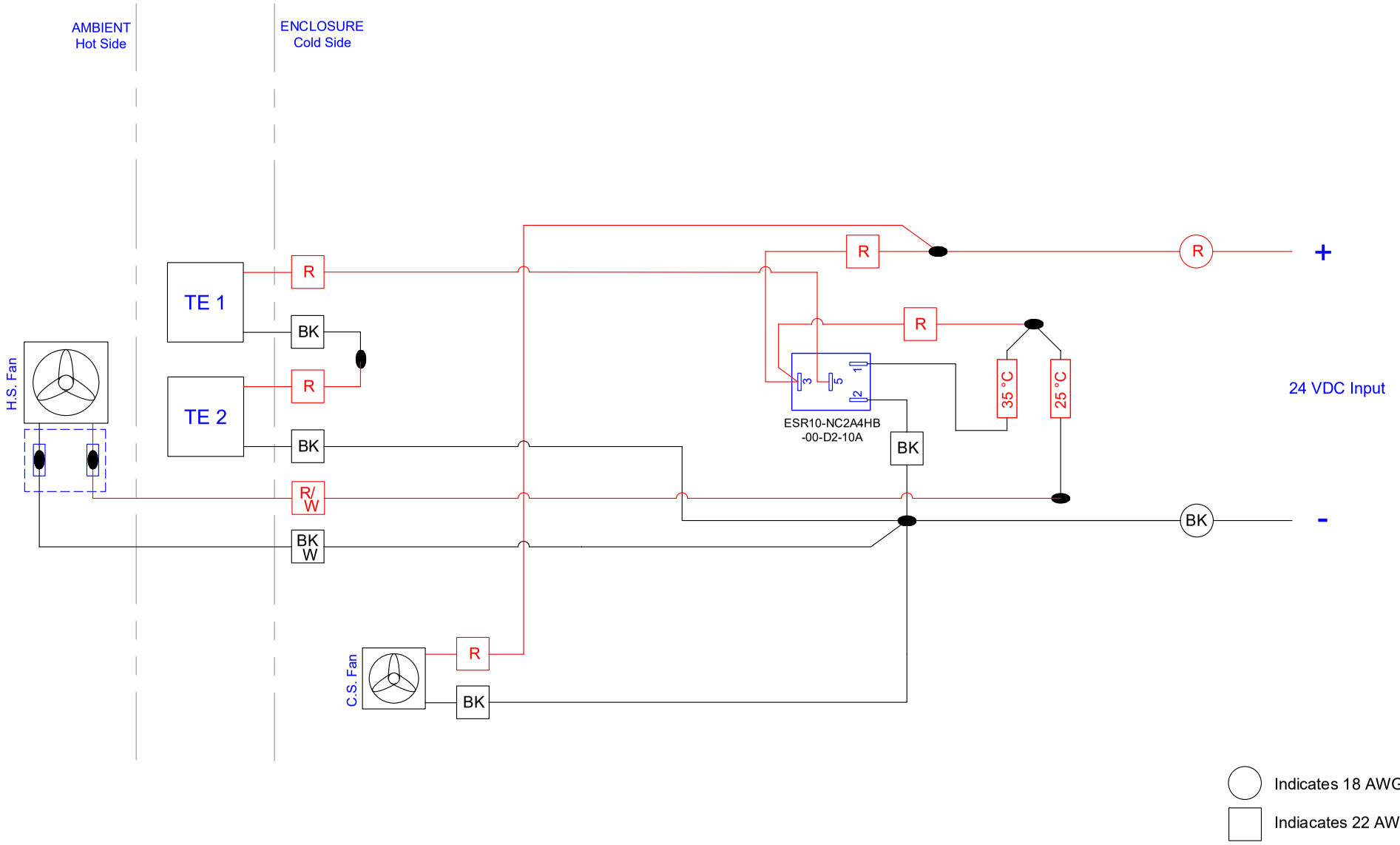

REV	DESCRIPTION	Date	APPROVED

INFORMATION DISCLOSED HEREIN IS THE CONFIDENTIAL PROPERTY OF TECA CORP. RECIPIENT SHALL NOT USE THE INFORMATION IN ANY UNAUTHORIZED MANNER.

UNLESS OTHERWISE SPECIFIED DIMENSIONS ARE IN INCHES
TOLERANCES ARE:

DECIMALS	ANGLE
.XX +/-	+/-
.XXX+/-	FRACTION +/-

FINISH:

MATERIAL:

THERMOELECTRIC COOLING AMERICA CORP.

AHP-270XE 24 VDC WITH TC-4F WIRING DIAGRAM

DRAWN BY: AA	DRAWING # SK210707		REV LEVEL
DATE: 07/13/2021			
S2007	SCALE	MASTER: MASTER	SHEET

Mounting, Monture, Montage, Montaggio

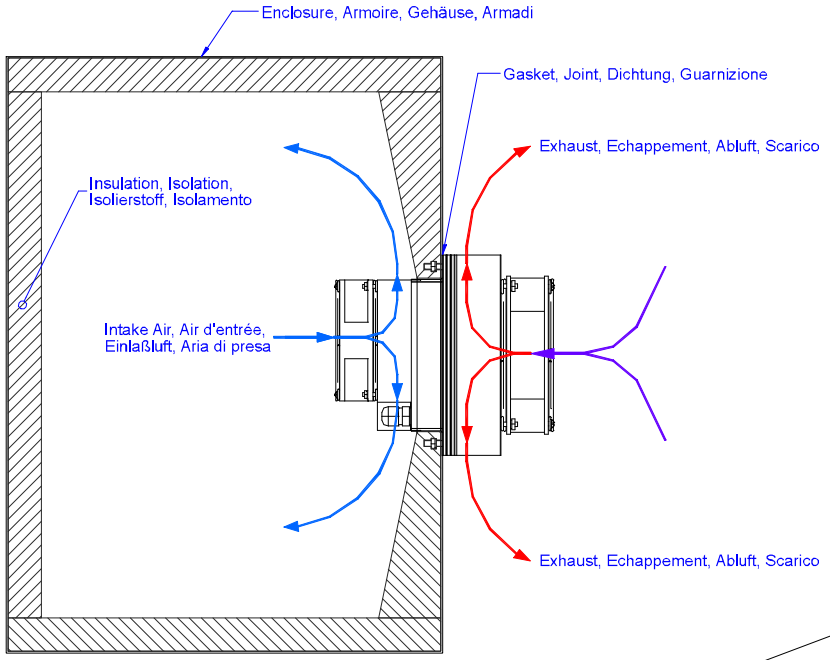

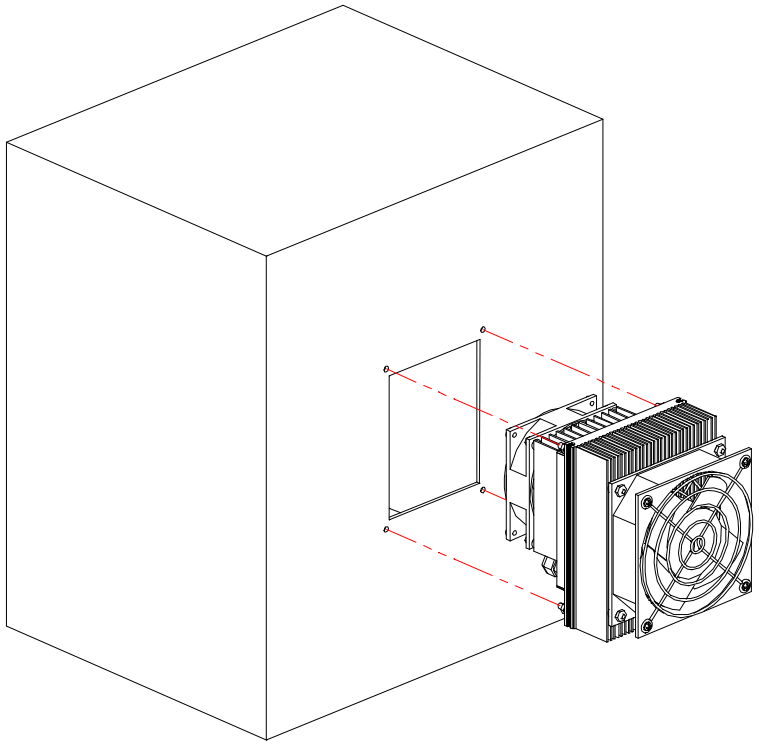

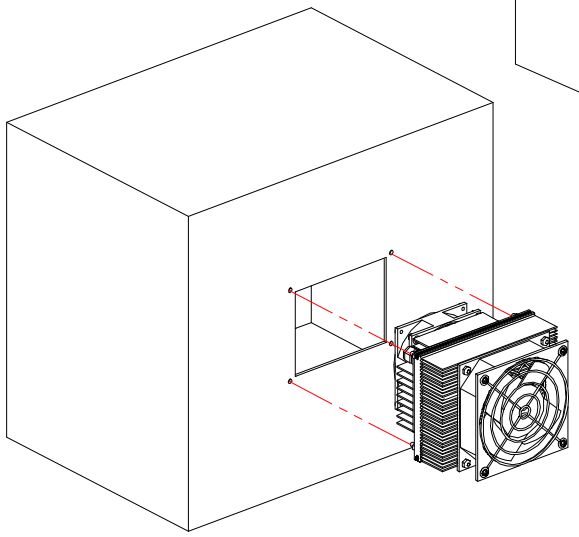

MOUNTING CUTOUT DIMENSIONS

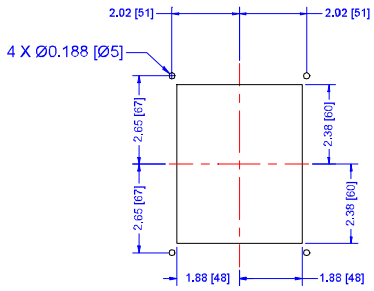

Alternate, Alternative, Alternative, Alternativa

English, Français, Deutsch, Italiano
Dimensions: Inches [Millimeters]

INFORMATION DISCLOSED HEREIN IS THE CONFIDENTIAL PROPERTY OF TECA CORP. RECIPIENT SHALL NOT USE THE INFORMATION IN ANY UNAUTHORIZED MANNER.

UNLESS OTHERWISE SPECIFIED DIMENSIONS ARE IN INCHES
TOLERANCES ARE:

DECIMALS	ANGLE
.XX +/-	+/-
.XXX+/-	FRACTION +/-

FINISH:

MATERIAL:

THERMOELECTRIC COOLING AMERICA CORP.

AHP-250, AHP-270 SERIES
TYPICAL FIELD MOUNTING

DRAWN BY: AA
DATE: 03/10/2014
DRAWING # SK140314
REV LEVEL
SCALE D9052
MASTER: SK140313
SHEET

REV	DESCRIPTION	Date	APPROVED

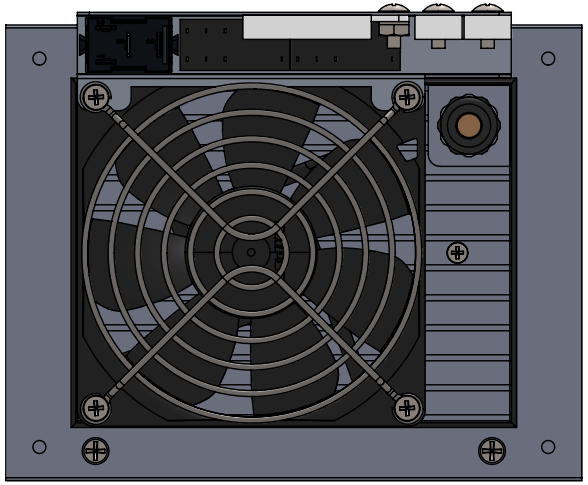

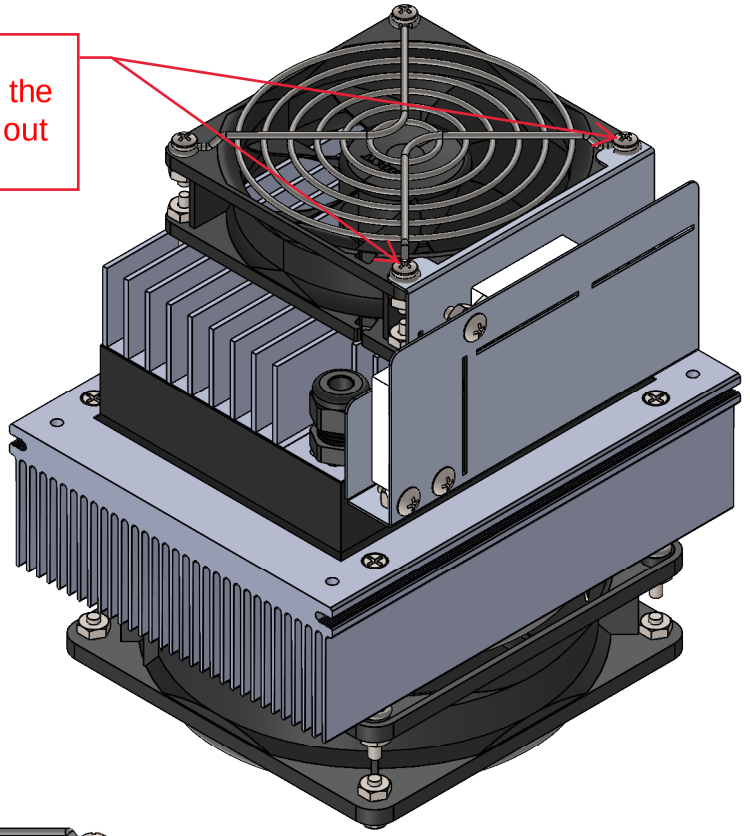
Loosen these screws to slide the TC-7F bracket out

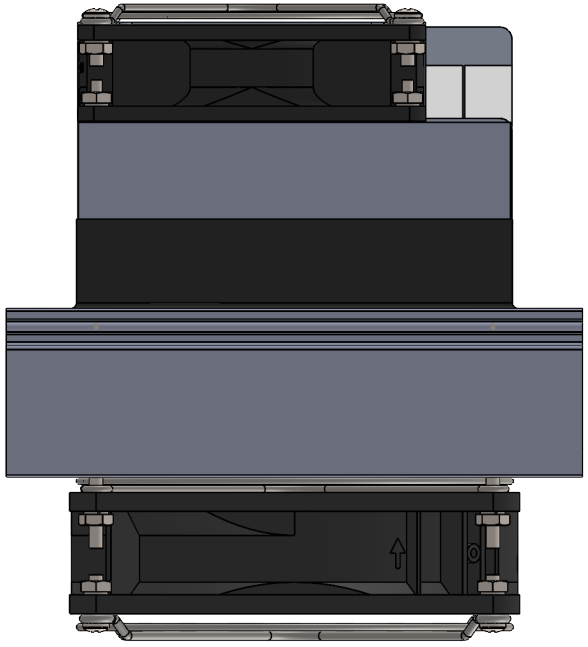

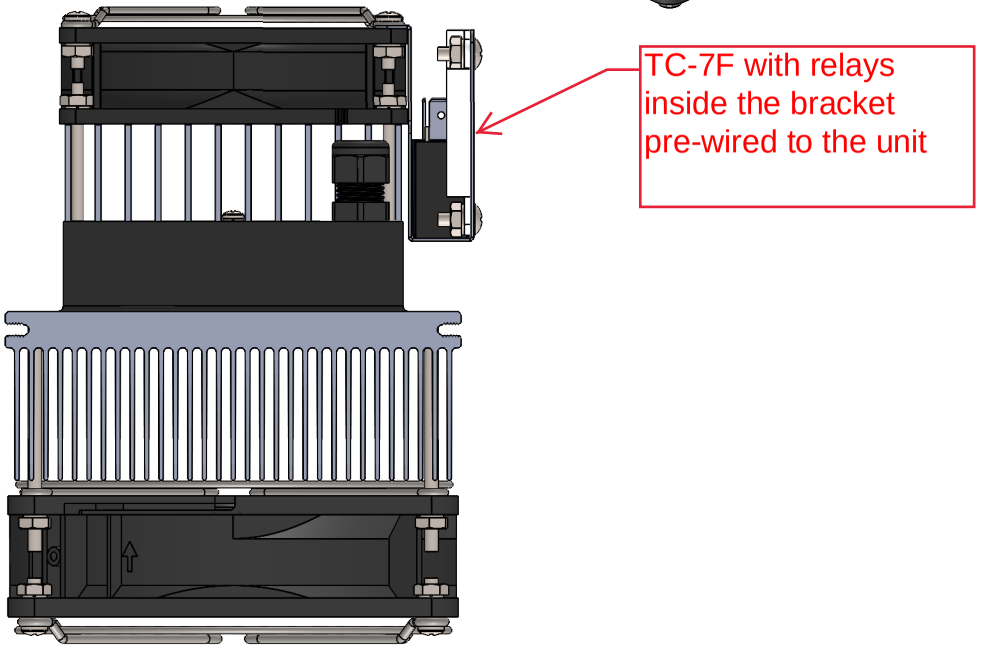
TC-7F with relays inside the bracket pre-wired to the unit

Fit the AHP-250XEHC along with pre-wired TC-7F controller bracket assembly through the mounting cutout on the enclosure. Making sure wires are not pinched between the enclosure and the unit, secure the AHP-250XEHC on the enclosure.

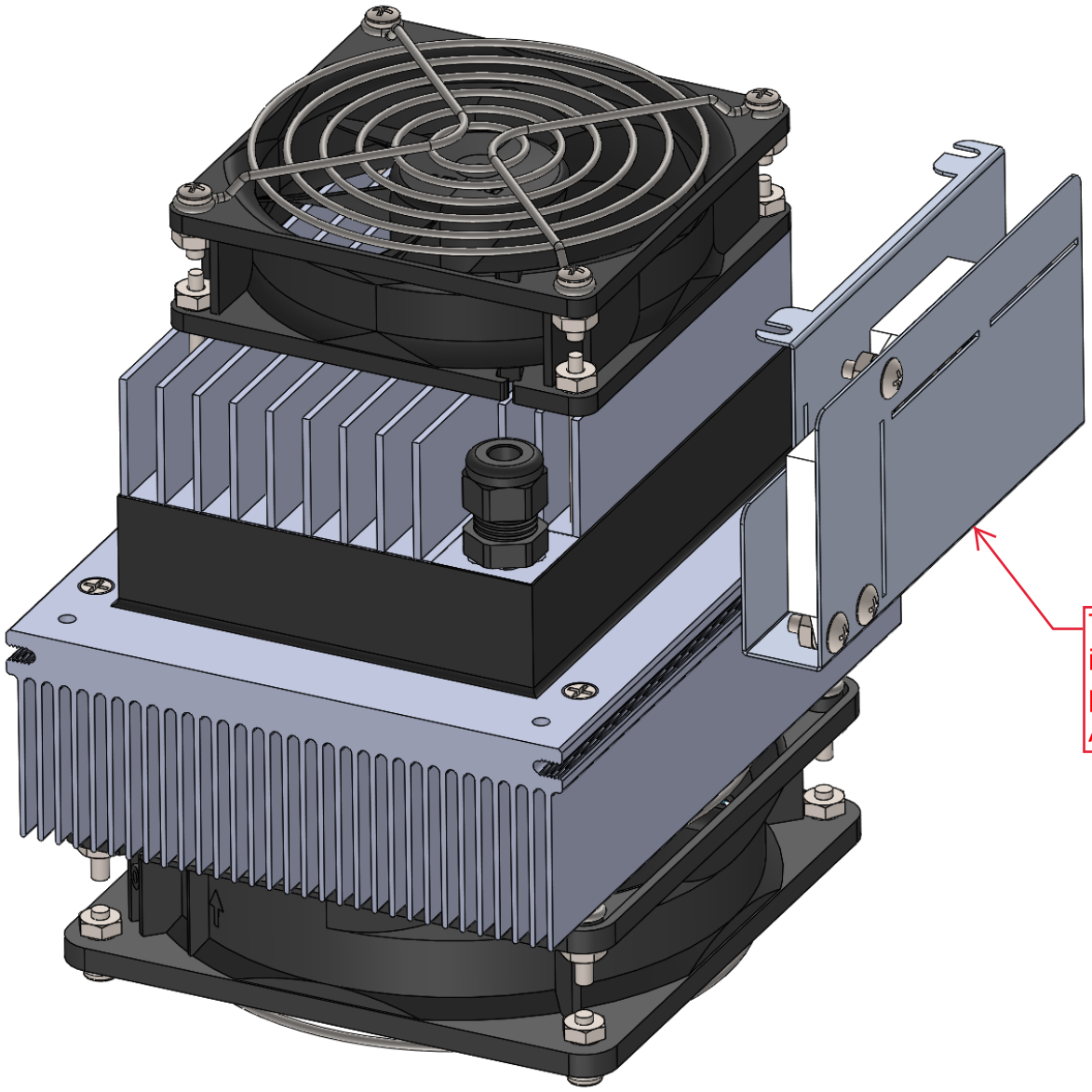

TC-7F controller inside the bracket pre-wired to the AHP-250XEHC

After the installation of the AHP-250XEHC on the enclosure is complete, slide the TC-7F bracket under the cold side fan finger guard and re-tighten the two screws.

Please note that on this guide the enclosure, mounting gasket and hardware are not shown.

Slide the TC-7F controller bracket under the cold side fan finger guard and re-tighten the two screws to secure the bracket in place.

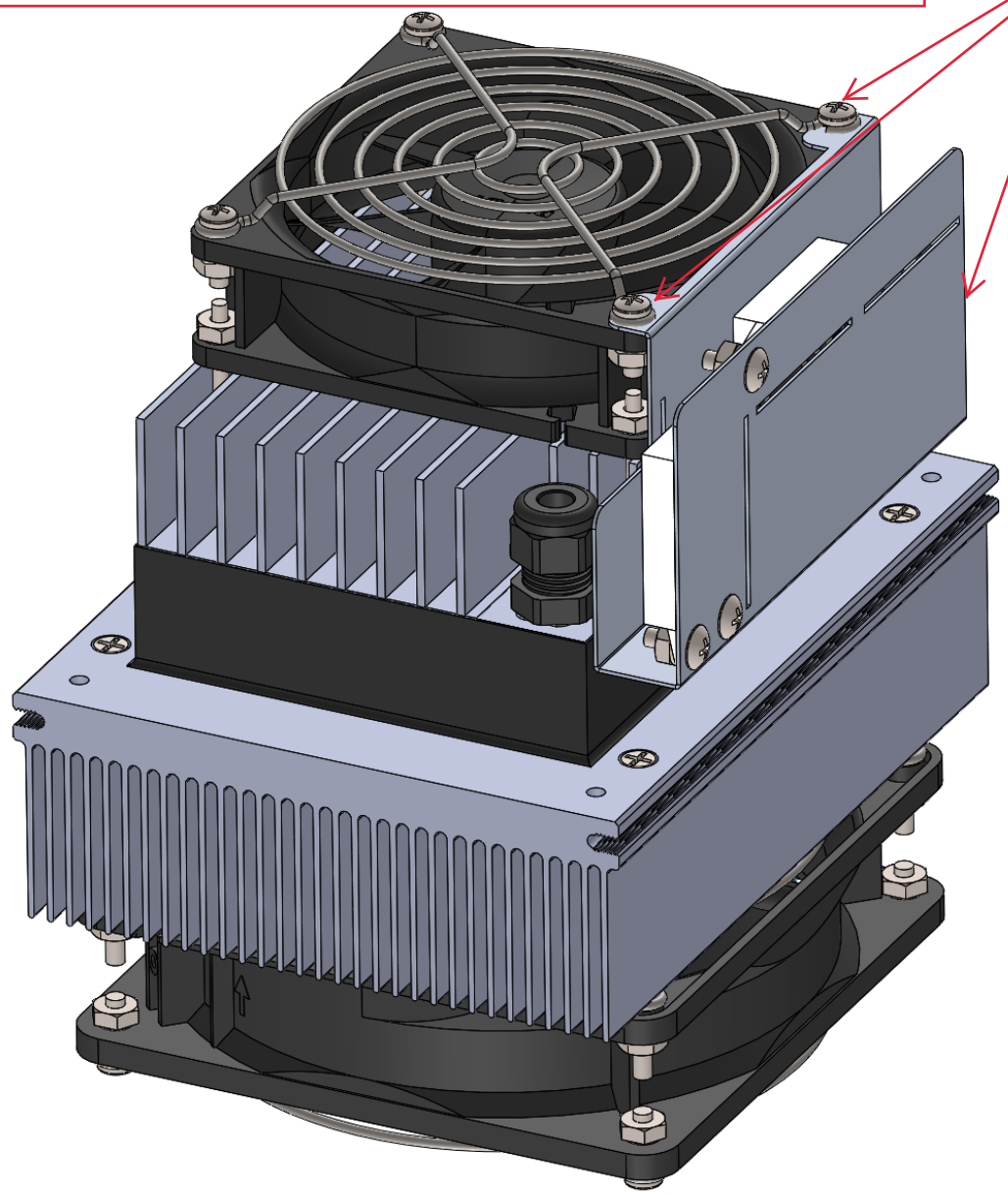

LIMITED WARRANTY

In the event a defect in material or workmanship is discovered in any of TECA's products within one year after the date they are delivered to Buyer, and if: (a) TECA is notified of the defect in writing by certified mail within 14 days of the date of discovery; (b) TECA may then either, at its sole discretion, inspect the product at Buyer's location, or require that the product be made available at Buyer's expense at TECA's premises for TECA's inspection within 14 days of the date of notification; and (c) the products are defective and the defects result from faulty materials and/or workmanship and not in any way from accident, misuse, misapplication, mishandling, modification, or alteration by the Buyer or the shipper, then TECA shall, at its sole option, repair or exchange defective products free of charge to Buyer, or credit to buyer the price of the defective products. ALL OTHER WARRANTIES, EXPRESS OR IMPLIED, ARE EXCLUDED, INCLUDING BUT NOT LIMITED TO THE IMPLIED WARRANTIES OF MERCHANTABILITY AND FITNESS FOR A PARTICULAR PURPOSE. IN NO EVENT SHALL TECA BE LIABLE FOR ANY CLAIM BASED UPON BREACH OF EXPRESS OR IMPLIED WARRANTY OR ANY OTHER DAMAGES WHETHER SPECIAL, INDIRECT, INCIDENTAL, CONSEQUENTIAL, LOST PROFITS, BUSINESS INTERRUPTION, OR LOSS OF BUSINESS OR CUSTOMER RELATIONSHIPS.

RETURNED GOODS, RESTOCKING CHARGES

In order to return merchandise for any reason (repair, replacement, or credit) a return authorization number must be issued by TECA. New merchandise may not be returned for credit beyond 60 days from shipment. Charges for incidental or other damages may also be made. All returned goods must be sent freight prepaid. A restocking charge of 15% will apply. On special equipment and custom modified equipment orders, additional incremental cancellation charges may be made.